LIQUID DUMP VALVES PNEUMATIC OPERATED

DIAPHRAGM BALANCED FAIL OPEN
MODEL PE

APPLICATIONS:

Used as oil or water dump valves on separators, treaters, knockouts, and other similar liquid accumulators where a reduced signal pressure is available.

FEATURES:

Diaphragm balanced single seat.
10 to 35 psig diaphragm pressure.
Fail Open service.
All internal parts can be removed with valve in-line
Reinforced oil resistant synthetic rubber diaphragms & seats

CERTIFICATIONS:

Canadian Registration Number (CRN):
0C15804.24567890NTY (Ductile)
0C15621.24567890NTY (Steel)
Kimray is an ISO 9001- certified manufacturer.

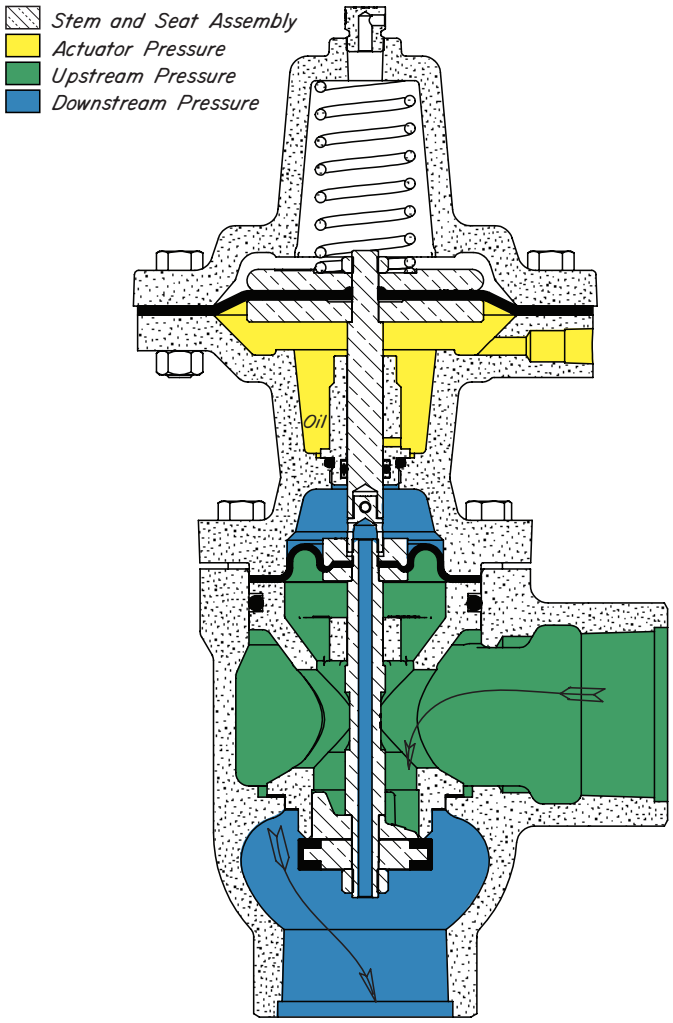

Standard Configuration Code †	Order Code	Line Size	Connection Type	Body Type	Max Δ P psig	Max. W.P. psig ††	Cv	Cf
DPE2SAADF4S	EKJ	2"	NPT	Angle	125	400	23.3	0.79
DPE2SATDF4S	EXJ			Thru				
DPE2ARADF4S	EKL		150RF	Angle		250		
DPE2ARTDF4S	EXL			Thru				
DPE3SAADF4S	EKP	3"	NPT	Angle			43.8	
DPE3SATDF4S	EXP			Thru				
DPE3ARADF4S	EKR		150RF	Angle				
DPE3ARTDF4S	EXR			Thru				
DPE4ARADF4S	EKW	4"	150RF	Angle			70.1	
DPE4ARTDF4S	EXW		150RF	Thru				

NOTES:

For standard & optional seals, metals, Cf Cv values, material specifications & dimensions see technical data on pages 04:I - 04:III
† For Corrosive service remove last "S" & replace with "C"
† For code builder see page 04:00.2
†† Max W.P. values based on -20°F to 100°F.

All Pictures shown are for illustration purpose only. Actual product may vary due to product enhancement.

DIAPHRAGM BALANCED FAIL OPEN
MODEL PD PARTS DRAWING

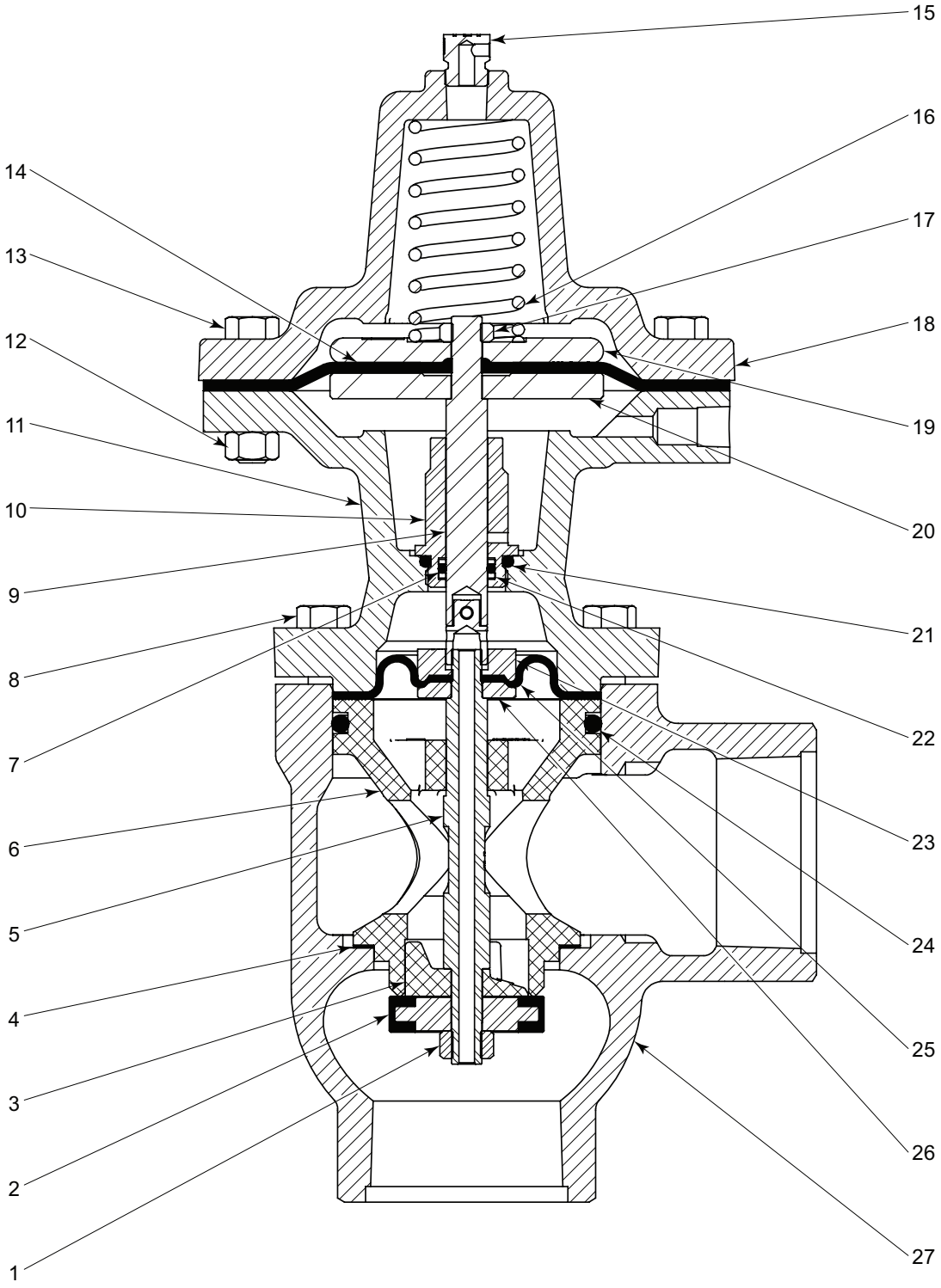

All Pictures shown are for illustration purpose only. Actual product may vary due to product enhancement.

DIAPHRAGM BALANCED FAIL OPEN
MODEL PD PARTS LIST

ITEM	QTY.	DESCRIPTION		PART NO.					
				STANDARD			**CORROSIVE**		
				2 INCH	3 INCH	4 INCH	2 INCH	3 INCH	4 INCH
1	1	Lock Nut ◊ *		173	906		173SS6	174SS6	
2	1	Seat ◊ *		7498HSN	7499HSN	----	7498HSN	7499HSN	----
		Seat ◊ *		----		165HSN	----		165HSN
		Seat Disc ◊		----		160	----		2494SS6
3	1	Ratio Plug ◊		332DEL	333DEL	334	2976SS6	2977SS6	2978SS6
4	1	Gasket ◊ *		276	277	309	276	277	309
5	1	Stem ◊		326	327	328	326SS6	327SS6	328SS6
6	1	Cage ◊		304DEL	305DEL	306	2966SS6	2967SS6	2968SS6
		Gasket		----	----	----	7575	7576	920
7	1	O-Ring *		154HSN	155HSN	155HSN	154HSN	155HSN	155HSN
8	(Qty)	Bolt		1672 x (6)	1672 x (6)	1672 x (8)	1672 x (6)	1672 x (6)	1672 x (8)
9	1	Stem Assembly		1474	1475		1474SS6	1475SS6	
10	1	Stem Guide		2463	2464		2463SS6	2464SS6	
11	1	Housing		1670	1467	1468	1670 ‡	1467 ‡	1468 ‡
12	(Qty)	Nut		241 x (8)	241 x (10)		241 x (8)	241 x (10)	
13	(Qty)	Bolt		430 x (8)	191 x (10)		430 x (8)	191 x (10)	
14	1	Diaphragm *		7053	743		7053	743	
15	1	Breather Plug		147			147SS6		
16	1	Spring		723	724		723	724	
17	1	Lock nut *		173	1478		173SS6	1478SS6	
18	1	Bonnet		1665	1655		1665 ‡	1655 ‡	
19	1	Upper Diaph. Plate		732	1476		732	1476	
20	1	Lower Diaph. Plate		737	738		737	738	
21	1	O-Ring *		1107HSN	639HSN	639HSN	1107HSN	639HSN	639HSN
22	2	Back up *		149T	150T		149T	150T	
23	1	Diaphragm Nut ◊		1471SS6	1472SS6	1473	1471SS6	1472SS6	1473
24	1	O-Ring ◊ *		329HSN	330HSN	331	329HSN	330HSN	331
25	1	Diaphragm ◊ *		335	336	4700	335	336	4700
26	1	Plate ◊		323SS6	324SS6	325SS6	323SS6	324SS6	325SS6
27	1	Body	Screwed Angle	1819	2379	----	1819 ‡	2379 ‡	----
			Screwed Thru	3081	3086	----	3081 ‡	3086 ‡	----
			Flanged Angle	2540	2382	2383	2540 ‡	2382 ‡	2383 ‡
			Flanged Thru	3083	3087	3090	3083 ‡	3087 ‡	3090 ‡
	2	Lifting Ring (not shown)		7559			7559		
						‡ Coated Parts available with "E" shell material			
Cage Assemblies				CBH	CBI	CBJ	CBHS6	CBIS6	CBJS6
				◊ These parts are stocked as Cage Assemblies.					
Repair Kits				RFM	RFSHSN	RFX	RFM	RFSHSN	RFX
				* These parts are recommended spare parts and are stocked as repair kits.					

Table 1 - Flow Coefficient(Cv) for Pneumatic Dump Valves

Line Size	Trim Size in. (mm)	Trim Type	Cf	Valve Opening Percentage									
				10	20	30	40	50	60	70	80	90	100
Diaphragm Balanced													
2"	1 1/2 in (38mm)	Linear (Nominal)	0.79	5.0	8.5	11.7	14.6	17.0	19.0	20.5	21.6	22.6	23.3
3"	2 1/4 in (57 mm)	Linear (Nominal)	0.79	6.7	11.1	15.6	20.3	24.8	29.2	33.4	37.2	40.7	43.8
4"	3 in (76 mm)	Linear (Nominal)	0.79	12.0	18.9	25.8	32.8	39.9	46.9	53.7	60.0	65.7	70.1
6"	4.88 in (124 mm)	Linear (Nominal)	0.79	14.2	21.0	31.6	61.2	98.3	139	179	217	250	277
Low Pressure High Volume Piston Balanced Throttling													
2" thru	1 1/2 in (38mm)	Linear (Nominal)	0.75	5.7	8.4	12.0	14.9	17.6	19.8	22.3	24.4	26.2	28.9
	2 in (51 mm)	Linear (Nominal)	0.75	8.3	15.3	21.5	27.2	31.6	36.0	39.3	41.6	44.0	45.8
2" angle	1 1/2 in (38mm)	Linear (Nominal)	0.75	3.7	7.9	12.5	15.7	18.6	21.4	24.1	27.2	30.1	33.3
	2 in (51 mm)	Linear (Nominal)	0.75	9.7	16.1	23.3	29.2	35.1	39.3	43.6	46.5	49.4	51.4
3" thru	2 in (51 mm)	Linear (Nominal)	0.75	11.6	21.5	30.5	38.6	45.7	51.3	55.6	59.1	61.6	64.0
	3 in (76 mm)	Linear (Nominal)	0.75	17.0	32.3	46.0	58.6	70.4	79.6	87.4	94.0	98.7	103
3" angle	2 in (51 mm)	Linear (Nominal)	0.75	12.5	22.9	32.2	41.8	49.4	56.2	60.8	65.3	68.4	71.7
	3 in (76 mm)	Linear (Nominal)	0.75	18.8	34.8	49.0	63.7	75.6	86.7	93.9	101	107	113
4" thru	3.75 in (95 mm)	Linear (Nominal)	0.75	17.8	32.9	48.6	61.2	73.1	84.8	94.5	102	108	114
	3 in (76 mm)	Linear (Nominal)	0.75	22.7	42.0	61.3	76.2	91.3	106	118	128	135	142
4" angle	3.75 in (95 mm)	Linear (Nominal)	0.75	18.4	35.5	52.0	67.9	84.7	96.4	110	120	130	137
	3 in (76 mm)	Linear (Nominal)	0.75	23.6	44.7	64.2	83.2	103	117	132	142	154	162
Piston Balanced Throttling													
2"	2 in (51 mm)	Linear (Nominal)	0.75	6.6	12.3	18.4	24.2	29.5	34.1	38.0	41.2	44.0	47.0
3"	3 in (76 mm)	Linear (Nominal)	0.75	12.7	18.7	29.0	41.0	52.9	63.4	71.9	78.4	83.7	89.0
4"	3 in (76 mm)	Linear (Nominal)	0.75	11.7	18.1	24.8	36.8	58.3	86.1	114	137	152	160

Kimray flow equations conform to ANSI/ISA - 75.01.01-2002
Kimray inherent flow characteristics conform to ANSI/ISA 75.11.01 -1985

PH ANGLE DIMENSIONS

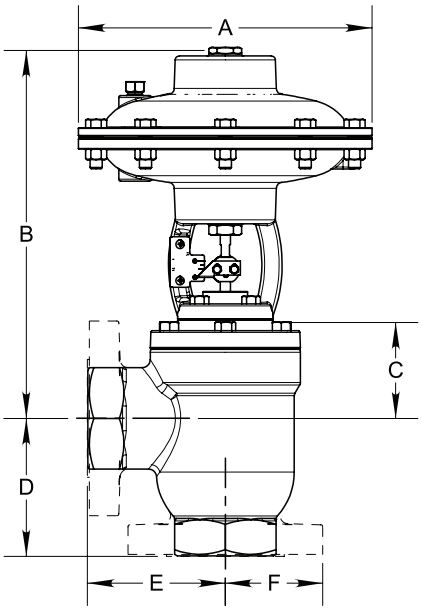

VALVE	A	B	C	D	E	F
2" SA & AR	9 1/16	11 9/32	2 29/32	4 1/4	4 1/4	3
3" SA & AR	12 7/8	15 9/32	4 1/32	5 1/2	5 1/2	3 3/4
4" AR	12 7/8	15 5/32	3 7/8	6 1/2	6 1/2	4 1/2

PH THRU DIMENSIONS

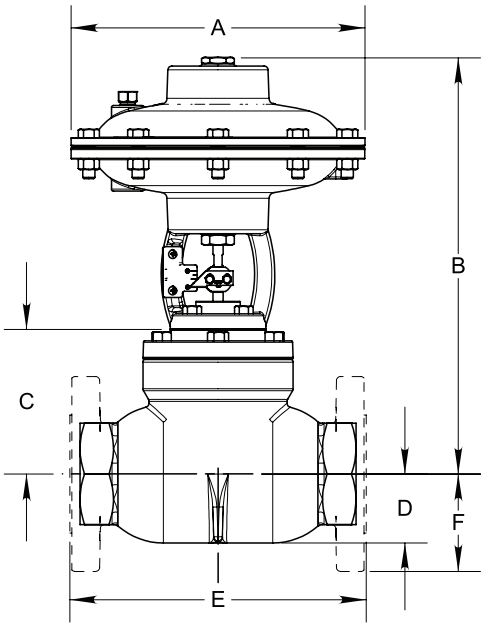

VALVE	A	B	C	D	E	F
2" SA	9 1/16	12 13/16	4 7/16	2 1/8	8 1/2	3
2" AR	9 1/16	12 13/16	4 7/16	2 1/8	9 1/8	3
3" SA	12 7/8	17 5/32	5 29/32	2 7/8	12	3 3/4
3" AR	12 7/8	17 5/32	5 29/32	2 7/8	12 3/16	3 3/4
4" AR	12 7/8	15 5/32	6 7/32	3 21/32	15	4 1/2

PD, PE, PP, PQ ANGLE DIMENSIONS

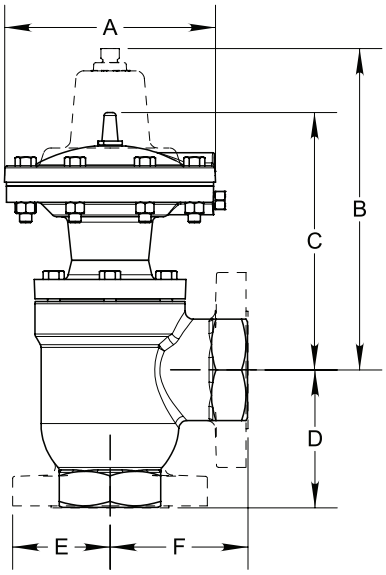

VALVE	A	B	C	D	E	F
2" SA & AR	6 1/2	9	8 1/2	4 1/4	3	4 1/4
3" SA & AR	8 1/2	11 3/4	10 1/4	5 1/2	3 3/4	5 1/2
4" SA & AR	8 1/2	12 1/2	11	6 1/2	4 1/2	6 1/2
6" SA & AR	10 3/4	—	19 3/4	10 1/4	5 1/2	7 11/16

PD, PE, PP, PQ ANGLE DIMENSIONS

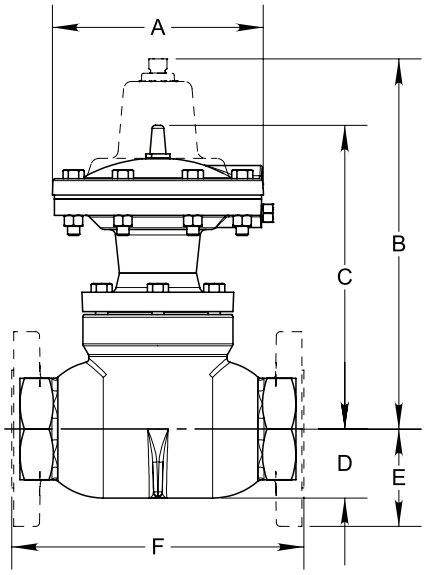

VALVE	A	B	C	D	E	F
2" SA	6 1/2	10 3/8	9 7/8	2 1/8	—	8 1/2
2" AR	6 1/2	10 3/8	9 7/8	—	3	9
3" SA	8 1/2	13 5/16	11 9/16	2 7/8	—	12
3" AR	8 1/2	13 5/16	11 9/16	—	3 3/4	12 3/16
4" SA	8 1/2	14 7/8	13 3/8	—	4 1/2	15 1/8
6" SA	10 3/4	—	19 3/4	—	5 1/2	22

All Pictures shown are for illustration purpose only. Actual product may vary due to product enhancement.

Table 2 - Seal Options		
Part	**Standard Material**	**Optional Material**
O-rings	HSN	FKM
Diaphragm	HSN	FKM
Seat	HSN	FKM

Table 3 - Seal Specifications			
		HIGHLY SATURATED NITRILE	**FKM**
	Kimray Suffix	HSN	V
Resistance	**Abrasion**	G-E	G
	Acid	G-E	G-E
	Chemical	F	E
	Cold	G	P
	Flame	P	E
	Heat	E	E
	Oil	E	E
	Ozone	G	G-E
	Set	G	G-E
	Tear	F	F
	Water/Steam	E	P
	Weather	G	E
	CO2	G	G
	H2S	F	P
	Methanol	E	P
Properties	**Dynamic**	G	G
	Electrical	F	F
	Impermeability	G	G
	Tensile Strength	G-E	G
	Temp. Range	-20° to +300°F	-15° to +400°F
		-29° to +149°C	-26° to +204°C
RATINGS: P-POOR, F-FAIR, G-GOOD, E-EXCELLENT			

Table 4 - Material Options - Diaphragm Balanced & Piston Balanced Throttle		
Part Description	**Standard Material**	**Corrosive Material**
Body	Ductile (ASTM A395)	Ductile (ASTM A395) + Kimcoat
Ratio Plug	2 & 3 inch Delrin (ASTM D4181), 4 & 6 inch (ASTM A395)	17-4PH (ASTM A564)
Cage	2 & 3 inch Delrin (ASTM D4181), 4 & 6 inch (ASTM A395)	Ductile (ASTM A395) + Kimcoat
Stem	303SS (ASTM A582)	316SS (ASTM A479)
Bonnet	Ductile (ASTM A395)	Ductile (ASTM A395) + Kimcoat
Piston	303SS (ASTM A582)	316SS (ASTM A479)
Cylinder	303SS (ASTM A582)	316SS (ASTM A479)

Table 5 - Material Options - Piston Balance High Volume			
Part Description	**Standard Material**	**Erosive Material**	**Corrosive Material**
Body	Ductile (ASTM A395)		
Bonnet	Ductile (ASTM A395)		
Cylinder	303SS (ASTM A582)		316SS (ASTM A479)
Piston	303SS (ASTM A582)		316SS (ASTM A479)
Ratio Plug	303SS (ASTM A582)	D-2 (ASTM A681)	316SS (ASTM A479)
Removable Seat	303SS (ASTM A582)	D-2 (ASTM A681)	316SS (ASTM A479)
Stuffing Box	Ductile (ASTM A395)		
Stuffing Box Stem	17-4PH (ASTM A564)		316SS (ASTM A479)
Piston Stem	303SS (ASTM A582)		316SS (ASTM A479)
Seat Disc	316SS (ASTM A479)		

KIMRAY INC.®

CODE BUILDER
D SERIES

Series:

D = Dump Valve

Model:

PD = Pneumatic Operated Diaphragm Balanced Fail Close
PE = Pneumatic Operated Diaphragm Balanced Fail Open
PP = Pneumatic Operated Piston Balanced Throttle Fail Close 4" only
PQ = Pneumatic Operated Piston Balanced Throttle Fail Open 4" only

Line Size:

2 = 2 NPS
3 = 3 NPS
4 = 4 NPS
6 = 6 NPS (PD ONLY)

End Connection:

SA = FNPT (2 & 3 NPS only)
AR = 150RF

Body Type:

A = Angle
T = Thru

Shell Material:

D = Ductile Iron
E = Ductile Iron w/Coating

Inner Valve Size:

F = Full Port
R = Reduced Port (PP only)

Actuator:

P = Pneumatic

Service Type:

S = Standard
C = Corrosive

D	PD	2	SA	A	D	F	1	S	

Options: Additional cost and lead times will apply
If multiple options required input in sequential order
Leave blank if no options required

1 = NACE Certification (Corrosive Option Only)
2 = Hydrostatic Test Certification
3 = MTR (Shell Components)
H = HSN Elastomers
V = FKM Elastomers
X = Export (Hydrostatic test, MTR & 3.1)

Not all selections available on all products listed.
See product pages 04:10.1 - 04:10.7 & 04:30.1 - 04:40.7
for available options