Genuine KIMRAY INC. Quality Since 1948

LOW PRESSURE MOTOR VALVES

1" 500 PSI

APPLICATIONS:

Liquid metering vessels where a 5 to 80 psig adjustable back pressure is desired and a maximum operating pressure of 500 psig is required.

Burner valve for throttling or snap action service.

Any system that requires a double acting motor valve but also requires an adjustable maximum back pressure.

FEATURES:

Tight Shut-off
Single soft seat
Removable valve seat
Ratio of diaphragm to seat area is 8:1
Controls approximately 8 times signal pressure
Spring adjustment from 5 to 80 psig
Minimum maintenance
All internal parts can be removed with valve in line

CAPACITY:

For liquid capacity refer to table of contents.
For gas capacity refer to catalog section "A".

CONSTRUCTION:

Body and housings are cast steel. Valve stem is 303 stainless steel. Spring is stainless steel. Diaphragm and seating materials are oil resistant synthetic rubber or polyurethane. After assembly each valve is given a complete operational test.

OPERATION:

The Stem Assembly is the only moving unit in the motor valve. The PRELOAD SPRING loads the Stem Assembly closing the valve there is no Diaphragm Pressure (Yellow) and if Upstream Pressure (Green) minus Downstream Pressure (Blue) is less than the PRELOAD SPRING force.

An increase in Diaphragm Pressure (Yellow) and/or an increase in differential pressure across the INNER VALVE SEAT overcomes the PRELOAD SPRING force, moves the Stem Assembly upwards, opening the valve.

A decrease in Diaphragm Pressure (Yellow) allows the PRELOAD SPRING to move the Stem Assembly downward and close the valve when Upstream Pressure (Green) minus Downstream Pressure (Blue) is less than the PRELOAD SPRING setting.

With an effective DIAPHRAGM area eight times the INNER VALVE SEAT area, and an adjustable PRELOAD SPRING, a differential pressure ranging from 5 to 80 psig and/or a Diaphragm Pressure (Yellow) ranging from 3 to 10 psig will open the valve depending on the PRELOAD SPRING setting.

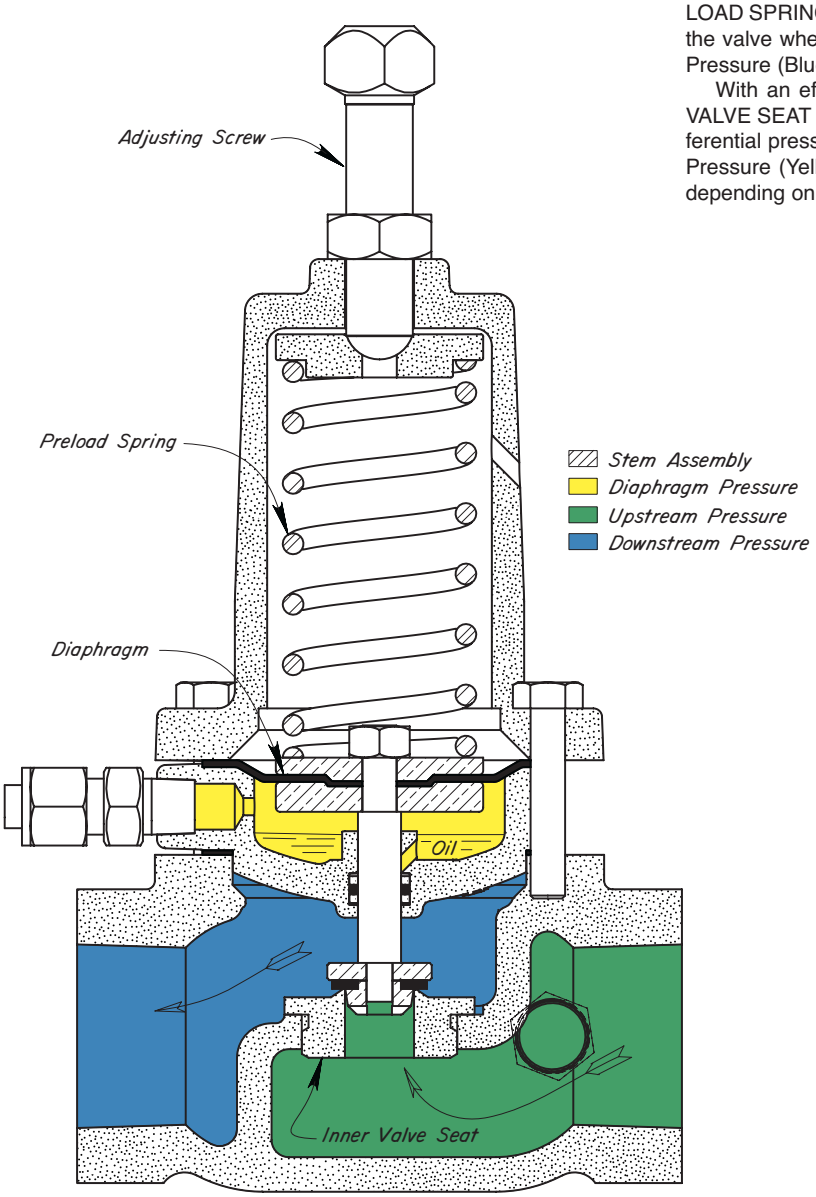

LOW PRESSURE MOTOR VALVES

1" 500 PSI
STEEL

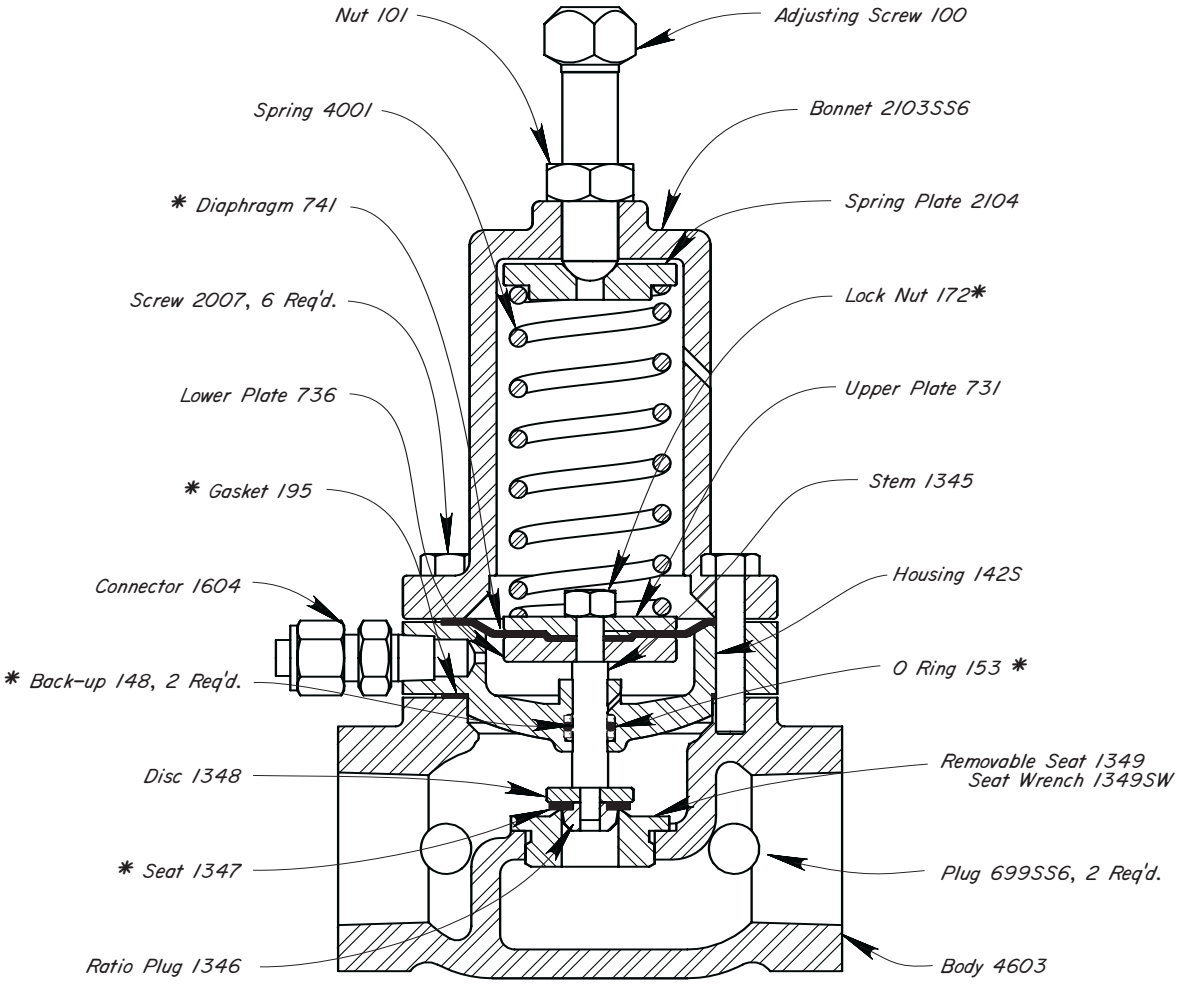

THRU VALVES AVAILABLE:

CAT. NO.	SIZE TYPE	REG. NO	OPER. PRES.	MAX W.P.	KIT
C-ABCC2	1" SCRD.	150 SMT ADAB-S	500	500	RHE

NOTES:

*These parts are recommended spare parts and are stocked as repair kits.