Genuine KIMRAY INC. Quality Since 1948

PRESSURE REGULATORS

LOWER HOUSINGS W/BEARINGS

APPLICATIONS:

Non-lubricated bearings are used where an oil seal is undesirable due to valve position, chemical contamination problems or for minimal maintenance. These bearings are available pressed into the cast lower housings or as completely removable bearing assemblies for all Kimray 'G' or 'MT' series valves. Pressure seal is accomplished with an ORing backed Teflon channel seal and is replaceable on both bearing types.

LOWER HOUSING W/PRESSED TYPE NON-LUBRICATED BEARINGS

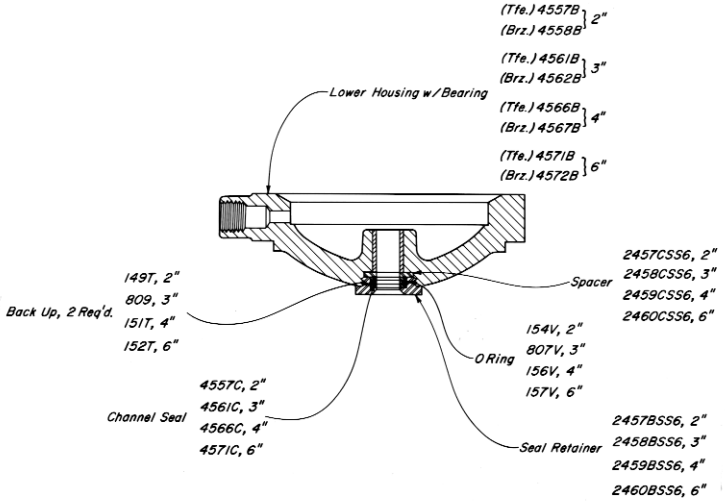

LOWER HOUSING W/REMOVABLE STEM GUIDES & NON-LUBRICATED BEARINGS

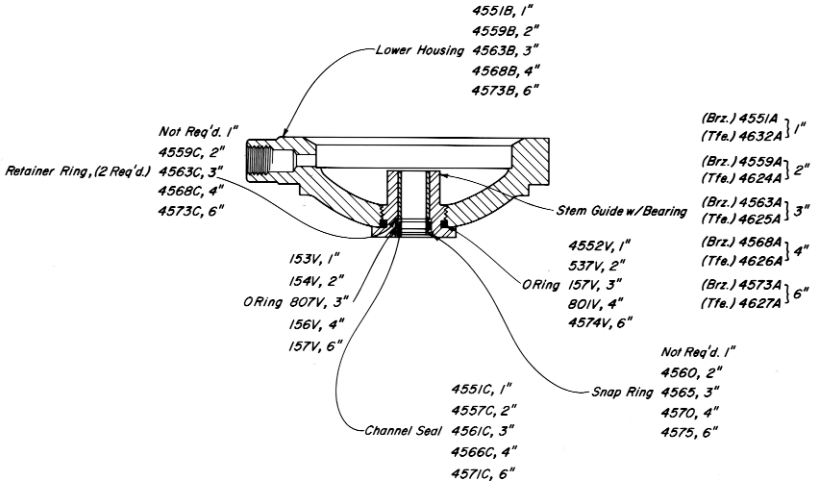

LOWER HOUSING ASSEMBLIES W/PRESSED TYPE NON-LUBRICATED BEARINGS AVAILABLE:

PART NO.	LINE SIZE	DESCRIPTION
4557	2"	Lower Hsng.w/Teflon Bearing Assy.
4558	2"	Lower Hsng.w/Bronze Bearing Assy.
4561	3"	Lower Hsng.w/Teflon Bearing Assy.
4562	3"	Lower Hsng.w/Bronze Bearing Assy.
4566	4"	Lower Hsng.w/Teflon Bearing Assy.
4567	4"	Lower Hsng.w/Bronze Bearing Assy.
4571	6"	Lower Hsng.w/Teflon Bearing Assy.
4572	6"	Lower Hsng.w/Bronze Bearing Assy.

LOWER HOUSING ASSEMBLIES W/PRESSED TYPE NON-LUBRICATED BEARINGS AVAILABLE:

PART NO.	LINE SIZE	DESCRIPTION
4632	1"	Lwr Hsng.w/Stm. Guide & Tfe. Brg. Assy.
4551	1"	Lwr Hsng.w/Stm. Guide & Brz. Brg. Assy.
4624	2"	Lwr Hsng.w/Stm. Guide & Tfe. Brg. Assy.
4559	2"	Lwr Hsng.w/Stm. Guide & Brz. Brg. Assy.
4625	3"	Lwr Hsng.w/Stm. Guide & Tfe. Brg. Assy.
4563	3"	Lwr Hsng.w/Stm. Guide & Brz. Brg. Assy.
4626	4"	Lwr Hsng.w/Stm. Guide & Tfe. Brg. Assy.
4568	4"	Lwr Hsng.w/Stm. Guide & Brz. Brg. Assy.
4627	6"	Lwr Hsng.w/Stm. Guide & Tfe. Brg. Assy.
4573	6"	Lwr Hsng.w/Stm. Guide & Brz. Brg. Assy.