LIQUID LEVEL CONTROL PILOT

Models GEN II, GEN II BACKmount

Instruction Manual: IMC1GEN-Pilot

GEN II Side Mount
Liquid Level Control Pilot

GEN II BACKmount
Liquid Level Control Pilot

DESCRIPTION:

The Kimray GEN II side mount and GEN II BACKmount Liquid Level Controllers are designed for use in liquid level and liquid/liquid interface control applications. They provide either a throttle (modulating) or snap (on/of) pneumatic output and can be set to operate in a direct (increasing liquid level increases output signal) or indirect mode (increasing liquid level decreases output signal).

The GEN II level controllers are equipped with displacer and hanger for horizontal or vertical installation.

The side mounted GEN II is reversible for right hand or left hand installation. The GEN II BACKmount is center-back mounted. Both models are standard with a 1/4" NPT tapped vent. No gas is released into the case. Both models include a 40 micron filter located just downstream of the instrument gas inlet port.

SPECIFICATIONS:

Normal Service: Liquid level and Liquid/Liquid interface

Instrument Gas: Clean and dry Air, Nitrogen or Natural Gas

Features: Intermittent-bleed pilot (very low emissions)
Low friction waggle arm
Snap or Throttle control in one pilot
Bleed rate: 0.4 scfd snap; .06 scfd throttle
Built in 40 micron supply gas filter
1/4" NPT tapped vented pilot

Tubing Connections: 1/4 NPT Internal

Normal Operating Temperature:

-50° to 300° F

-45° to 149° C

Supply Pressure: 10 - 35 psig (.7 - 2.4 bar)

Operating pressure: 0 - 4000 psig (276 bar)

Specific Gravity:
Minimum detectable specific gravity: .50
Minimum differential specific gravity in interface: .25*
Maximum specific gravity of lighter fluid: .85

*Optional displacers are available for lower differential specific gravity in interface service.

Input Signal

Type: Liquid level or liquid / liquid interface

Level change required for full change in output signal in 1.0 specific gravity liquid, with 30 psig (2.1 bar) supply pressure with standard displacer in vertical orientation:

Control Mode	Maximum Sensitivity proportional band level change Inches (mm)	Minimum Sensitivity proportional band level change Inches (mm)
GEN II Side Mount		
Throttling	2" (50 mm)	4" (100 mm)
Snap	4" (100 mm)	10" (254 mm)
GEN II BACKmount		
Throttling	2" (50 mm)	4" (100 mm)
Snap	4" (100 mm)	9" (230 mm)

Steady-State Air consumption @ 30 psig (2.1 bar) supply pressure

Snap Mode	.407 scfd	.011 scmd
Throttle Mode	.610 scfd	.017 scmd

Standard Displacer Dimensions:
1-3/4 X 12 inchs, 44.5 X 305 mm

Vessel Connection:
2" NPT Standard

Optional Connections:
2" ANSI Flanged RF & RTJ - Class 150, 300, 600, 1500
3" ANSI Flanged RF Class 150, 300, 600, 900, 1500
3" ANSI Flanged RJT Class 300, 600, 900, 1500
4" ANSI Flanged RF Class 150, 300, 600, 1500
4" ANSI Flanged RJT Class 600
6" ANSI Flanged RF & RTJ - Class 1500
3",4", 5" Hammer Union

AVAILABLE MODELS:

Model	Description & Control Modes
GEN II	Side mounted, Snap or Throttle, Direct or Indirect
GEN II BACKmount	Center-back mounted, Snap or Throttle, Direct or Indirect

OPERATION:

A spring balances the weight of the displacer. As liquid level rises around the displacer, the net buoyancy of the displacer plus the balancing force of the spring lifts the waggle arm assembly. The opposite end of the waggle arm is forced downward, pulling down on the link and down on the tangent arm. On the opposite side of the pilot fulcrum, the tangent arm pushes up on the actuator in the pilot.

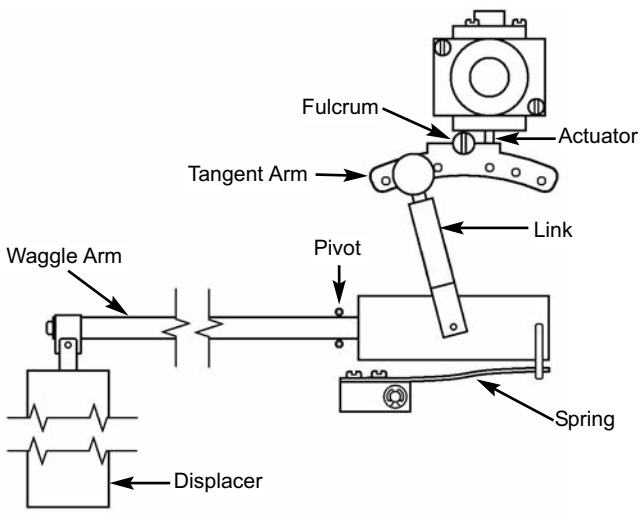

As the actuator travels in response to force from the tangent arm, it continually repositions a small three-way valve (the pilot plug and seats) which modulates the output pressure. This output is most often used to control diaphragm pressure in a control valve. Proper function can best be accomplished when the gas flowing through the pilot is clean and free of liquid.

INSTALLATION:

BEFORE INSTALLATION:

Be sure you fully understand the application, operation and connection of the device before installing.

WARNING:

Only trained personnel should install or service a liquid level control pilot or the devices to which it is connected. Pilots and other control devices should be installed, operated, and maintained in accordance with international codes and regulations, manufacturer's instructions, and proven best practices.

Personal injury, equipment damage, property damage, leakage or bursting of pressure-containing parts may result if the pilot is overpressured or installed where service conditions could exceed the limits given in the SPECIFICATIONS section.

Overpressure protection should also be provided if the pilot inlet pressure may exceed the safe working pressure of the equipment downstream.

To avoid injury or damage, install pressure-relieving or pressure limiting devices to prevent service conditions from exceeding those limits. Consult the appropriate code, regulations, or standards.

If a liquid level control pilot is used in a hazardous or flammable fluid service, personal injury and property damage could occur due to fire or explosion of vented fluid that may have accumulated. To prevent such injury or damage, install piping or tubing to vent the fluid to a safe, well-ventilated area or containment vessel. When venting a hazardous fluid, the piping or tubing should be located far enough away from any buildings or windows so as not to create further hazard. The vent opening should be protected against anything which could obstruct it, or it should be connected to exhaust tubing or tubing connected to a vapor recovery system.

Consideration should be given to the potential risk of injury or property damage due to escaping fluid. To avoid such risks, install the regulator in a safe location.

Inspect the openings in the pilot for foreign material and clean the connecting lines to remove scale, chips and debris.

VENT:

Periodically check the vent opening or the end of the remote vent pipe, if one is required. Be certain they are clear. If a vent should become blocked the pilot could lose control.

Warning: If a hazardous or flammable gas is being used for instrument gas, and the pilot is in an enclosed area, personal injury or property damage could result from accumulated gas being released through the vent. To avoid potential risk provide adequate ventilation or pipe away the vented gas.

CAUTION:

If the GEN II Level Controller is installed on a vessel that is to be shipped to a different location, remove the displacer and rod extensions before shipment. Failure to do so could result in damage to the displacer, the displacer rod, or even to the pilot, due to vibration and impact during shipment. After the vessel is in its final location, reassemble the displacer and displacer rod extension.

Check clearances to be sure there are no obstructions inside the tank that will interfere with displacer installation or operation.

HORIZONTAL DISPLACER INSTALLATION: GEN II Level Controls are shipped with the vertical adapter attached to the displacer. To mount the displacer for horizontal service:
1. Remove displacer from hanger block.
2. Remove extension rod and coupling from terminal arm.
3. Thread the displacer all the way onto threads of terminal arm.

STANDARD VERTICAL DISPLACER

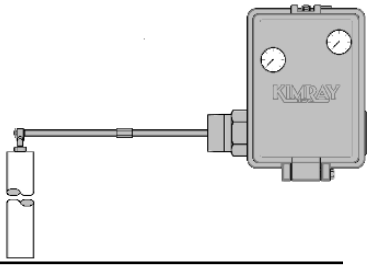

REMOVE

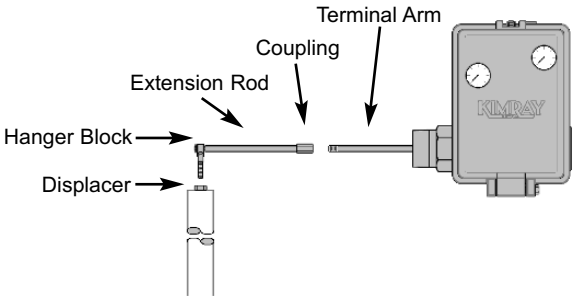

INSTALL

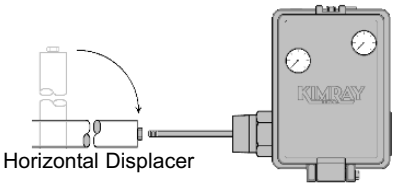

FINISHED HORIZONTAL DISPLACER

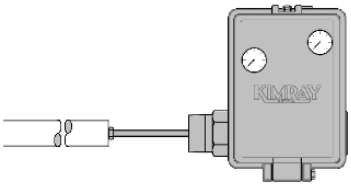

INSTALLING THE LEVEL CONTROL

CAUTION: Do not pick up the controller or carry the controller by using the displacer arm or displacer as a handle.

NPT CONNECTION: Apply TFE tape or pipe compound to the male threads of the threaded body, or use appropriate gaskets for a flanged body. When installing a threaded body, tighten sufficiently to seal the threads. Use a wrench on the flats of the body. Do not use the pilot case to tighten the connection. Make sure the pilot case is vertical when finished.

FLANGED CONNECTION: Use a suitable gasket between the body and the vessel connection flange.

Remove the plastic plugs from the 1/4” NPT openings. 1/4" or 3/8" tubing (not provided) must be installed:
1. SUPP - Connect to a source of clean, dry instrument gas.
2. OUTPUT - Connect to the diaphragm housing on the control valve being operated.
3. VENT - Connect to a preferred location for vented supply gas, or to a vapor recovery system.

CHANGING CONTROLLER MODE OR ACTION

CAUTION: To avoid personal injury caused by a sudden release of pressure, shut off the instrument gas supply pressure and bleed pressure from the supply lines before performing any change between snap and throttle mode.

CHANGING MODE:
The mode is selected with the Switch Plate. After shutting off and venting instrument gas pressure, loosen the Selector Knob approximately one half turn. Then turn the Switch Plate to “**T**” for throttle mode, or “**S**” for snap mode. Then tighten Selector Knob.

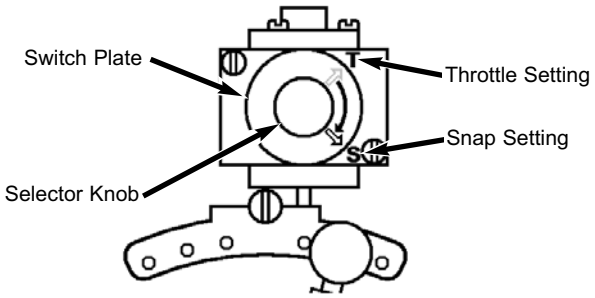

CHANGING ACTION: GEN II Sidemount

1. Refer to the following diagram to determine the proper orientation of parts for the desired action (direct or indirect).
2. Pull out the Link Knob, then move it to the desired setting and press into hole.

SNAP SETUP

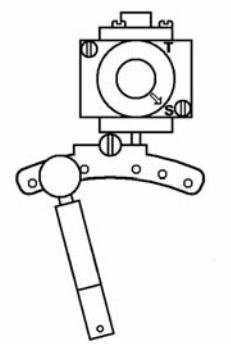

Left of pivot for PC valve
Right of pivot for POvalve

THROTTLE SETUP

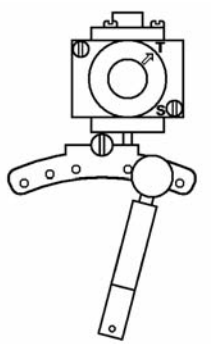

Right of pivot for PC valve
Left of pivot for PO valve

CHANGING ACTION: GEN II BACKmount

1. Refer to the following diagram to determine the proper orientation of parts for the desired action (direct or indirect).
2. Pull out the adjustment pin, then move it to the desired setting and press into hole.

SNAP SETUP

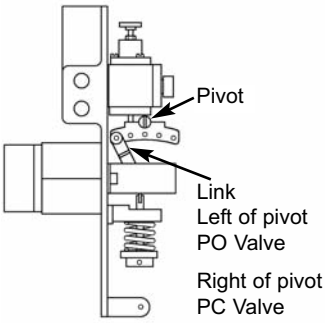

THROTTLE SETUP

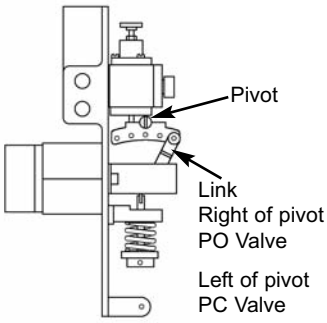

Side View

SPAN ADJUSTMENT:

CAUTION: With liquids with specific gravity less than 1.0 it is best to set the link for the most sensitive response. This will result in less span. Calling for greater spans with low specific gravity can cause span to exceed the length of the displacer, resulting in lost of control.

GEN II Side mount Span Adjustment

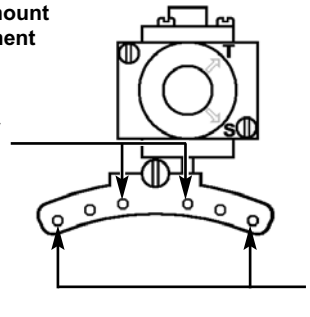

GEN II Side Mount Snap Operation Span Adjustment

1. Refer to the diagram above to determine the proper orientation of parts for the desired span.
2. Pull out the link knob, then move it to the desired setting and press into hole.

GEN II BACKmount Span Adjustment

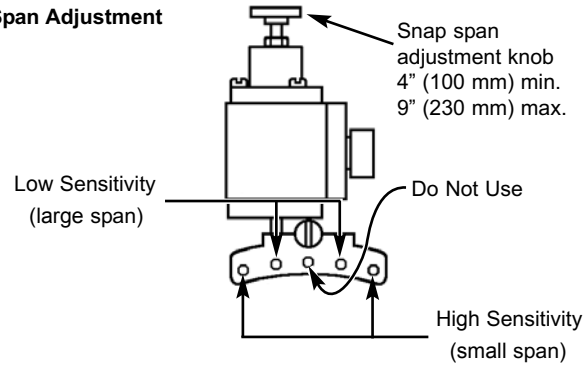

GEN II BACKmount Snap Operation Span Adjustment

1. Refer to the diagram above to determine the proper orientation of parts for the desired span.
2. Pull out the adjustment pin, then move it to the desired setting and press into hole.
3. Do not use center hole.
4. With adjustment pin located in outer hole (recommended) the snap span can be adjusted with the adjustment knob at top of pilot. Turning the knob clockwise will increase span; turning counterclockwise will reduce span.

LIQUID LEVEL ADJUSTMENT:

The liquid level is adjusted with a single knob on either model.

GEN II Side mount

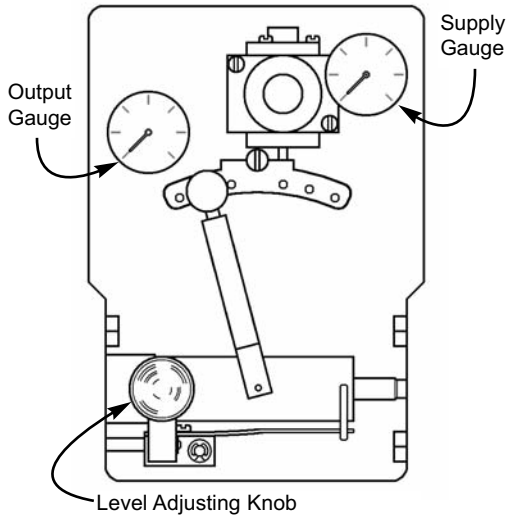

Clockwise to raise level
Counter Clockwise to lower level

GEN II BACKmount

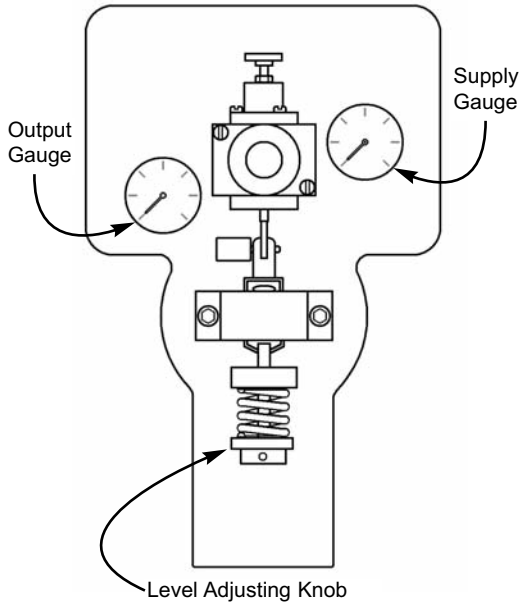

Turn left to raise level
Turn right to lower level

START-UP GEN II Side mount:

Throttle: (No liquid on displacer)

PO Valve -- At 0 psig turn adjusting knob counter clockwise to produce ~ 10 psig, then turn clockwise ~ one turn to 0 psig.

PC Valve -- At 0 psi turn adjusting knob clockwise to produce 20 to 30 psig.

Snap: (No liquid on displacer)

PO Valve -- At 0 psig turn adjusting knob counter clockwise to snap ON, then turn clockwise ~ two turns to 0 psig.

PC Valve -- At 20 to 30 psig turn adjusting knob counter clockwise to snap OFF, then turn clockwise ~ two turns to 20 to 30 psig.

Interface:

Cover displacers with the lighter fluid. Heavier fluid must be below the displacer. Then adjust same as above.

START-UP GEN II BACKmount:

Throttle: (No liquid on displacer)

PO Valve -- At 0 psig turn adjusting knob right to produce ~ 10 psig, then turn left ~ one turn to 0 psig.

PC Valve -- At 0 psi turn adjusting knob left to produce 20 to 30 psig.

Snap: (No liquid on displacer)

PO Valve -- At 0 psig turn adjusting knob right to snap ON, then turn left ~ two turns to 0 psig.

PC Valve -- At 20 to 30 psig turn adjusting knob right to snap OFF, then turn left ~ two turns to 20 to 30 psig.

Interface:

Cover displacers with the lighter fluid. Heavier fluid must be below the displacer. Then adjust same as above.

MAINTENANCE:

Maintenance should be performed on a regular basis. An initial inspection interval of 12 months is recommended. Depending on the service conditions and the condition of the valve, the inspection interval may be decreased or increased.

Warning: If the pilot vents fluid or a leak develops in the system, it indicates that service is required. Failure to take the regulator out of service immediately may create a hazardous condition.

WARNING:

Before performing any service be sure that the level controller is fully isolated and that all pressure has been relieved.

Be sure that any operating or instrument gas lines have been disconnected.

Never tighten any fitting or the main connections to the level controller while there is pressure on the line.

Detailed repair instructions are available for your specific level controller.

Repair Kits are available. Consult the Kimray Catalog, Section C1, or the packing slip which is enclosed with each regulator for the correct Repair Kit number.

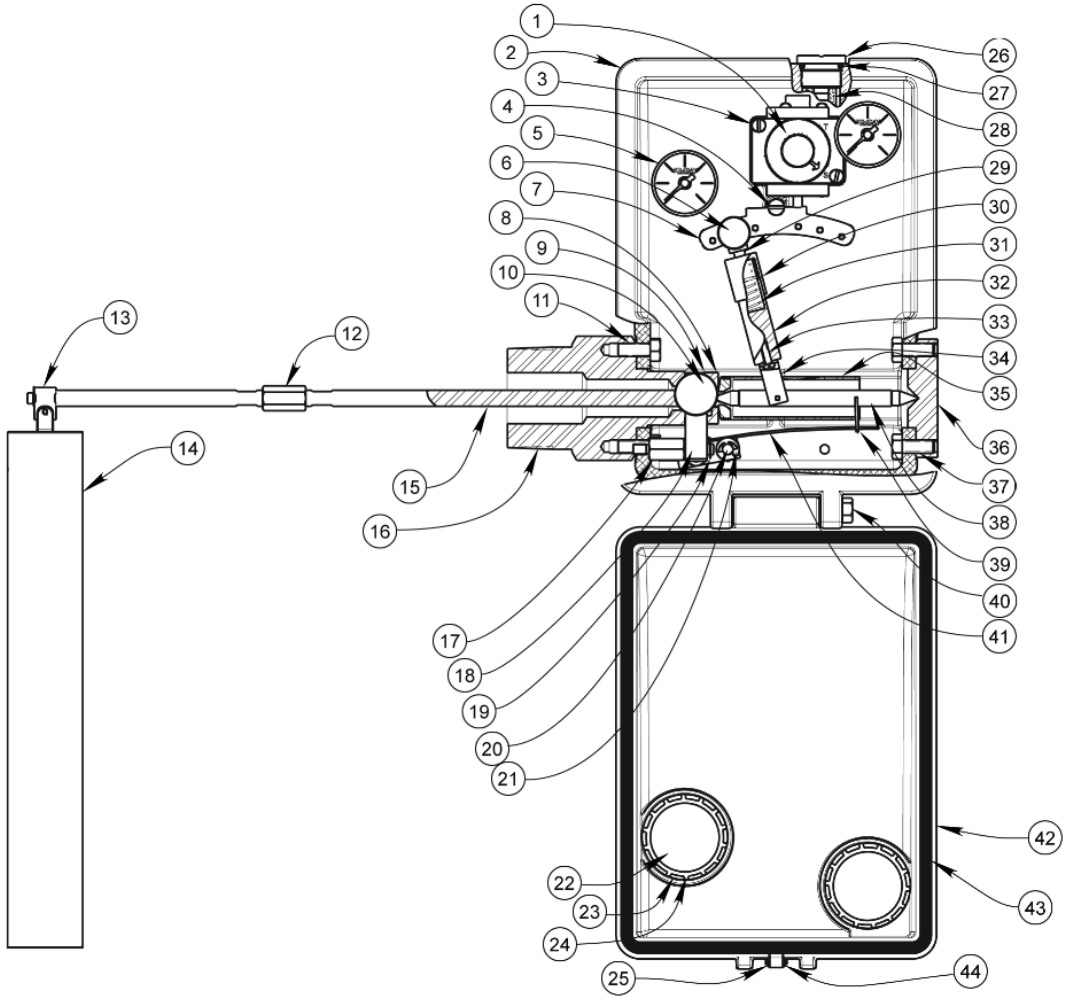

This is a general representation of a GEN II Sidemount Liquid Level Controller. For specific parts and their orientation refer to the Kimray Catalog, Section C1, or the packing slip which is enclosed with level controller.

Key	Description
1	Lock Washer, plated steel
2	Case, powder coated cast aluminum
3	Screw, plated steel
4	Screw, plated steel
5	Gauge
6	Link Assembly, stainless steel
7	Tangent Arm, stainless steel
8	Retainer, stainless steel
9	Seal Ring, teflon
10	Adjusting Screw, stainless steel
11	Screw, plated steel
12	Coupling, stainless steel
13	Extension Rod Assembly, stainless steel
14	Displacer, polyvinyl chloride
15	Terminal Arm, stainless steel
16	Mounting Piece, LCC steel
17	Arm Post, stainless steel
18	Adjusting Lever, stainless steel
19	Snap Ring, stainless steel
20	Pivot Post, stainless steel
21	Snap Ring, stainless steel
22	Lens, acrylic
23	Lens Gasket
24	Lens Retaining Ring
25	Screw, plated steel
26	Filter Cap, aluminum
27	O Ring, viton
28	Filter, 40 micron
29	Link Screw, stainless steel
30	Link Cap, stainless steel
31	Spring
32	Link Body, stainless steel
33	Screw, stainless steel
34	Yoke, stainless steel
35	Extension Housing, stainless steel
36	Pivot Plate, stainless steel
37	Screw, plated steel
38	Pivot Rod, stainless steel
39	Wire, stainless steel
40	Screw, stainless steel
41	Spring Assembly, Screw, stainless steel Toggle, stainless steel Spring
42	Cover, powder coated aluminum
43	Gasket
44	Latch, stainless steel

Parts for Model GEN II BACKmount

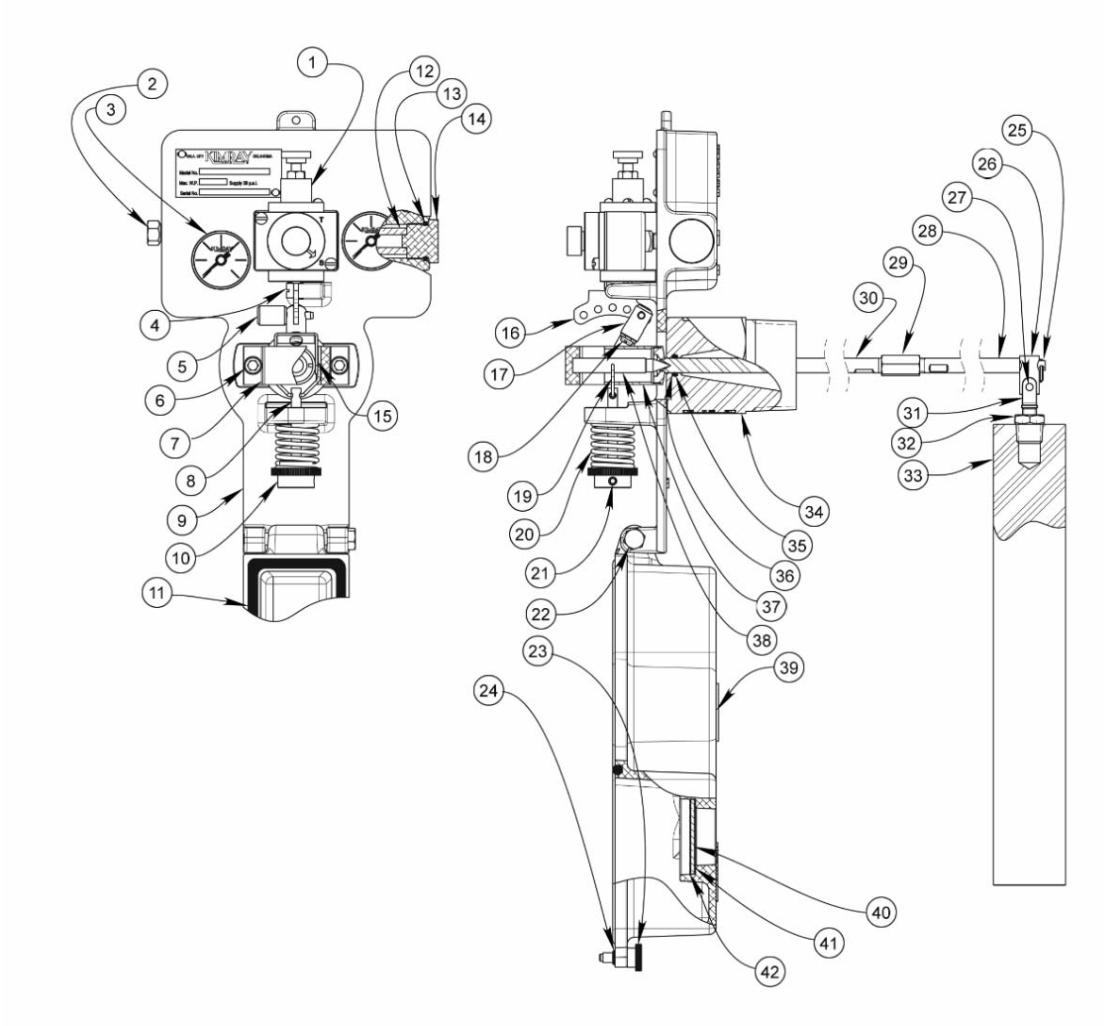

This is a general representation of a GEN II BACKmount Liquid Level Controller. For specific parts and their orientation refer to the Kimray Catalog, Section C1, or the packing slip which is enclosed with level controller.

Key	Description
1	Pilot YBU (see following page)
2	Breather Plug, aluminum
3	Gauge (2)
4	Screw, plated steel
5	Pull Pin, aluminum & stainless steel
6	Screw, plated steel
7	Retainer, extruded aluminum
8	Adjusting Screw, stainless steel
9	Back Plate, cast aluminum
10	Adjusting Knob, aluminum
11	Gasket
12	Filter, 40 micron
13	O-Ring, viton
14	Filter Cap, aluminum
15	Yoke, stainless steel
16	Tangent Arm, stainless steel
17	Link Body, stainless steel
18	Screw, plated steel
19	Waggle Arm Wire, stainless steel
20	Spring
21	Set Screw, stainless steel
22	Screw, stainless steel
23	Cover Screw, stainless steel
24	O-Ring, neoprene
25	Cotter Pin, stainless steel
26	Hanger Block, stainless steel
27	Rivet, stainless steel
28	Float Arm Extension, stainless steel
29	Coupling, stainless steel
30	Terminal Arm, stainless steel
31	Yoke, stainless steel
32	Bushing, stainless steel
33	Displacer, polyvinyl chloride
34	Mounting Piece, LCC steel
35	O-Ring, HSN
36	Seal Ring, TFE
37	Waggle Arm Housing, stainless steel
38	Pivot Rod, stainless steel
39	Cover, cast aluminum
40	Lens, acrylic
41	Gasket
42	Lens Retaining Ring

GEN II Pilot, Code YBT

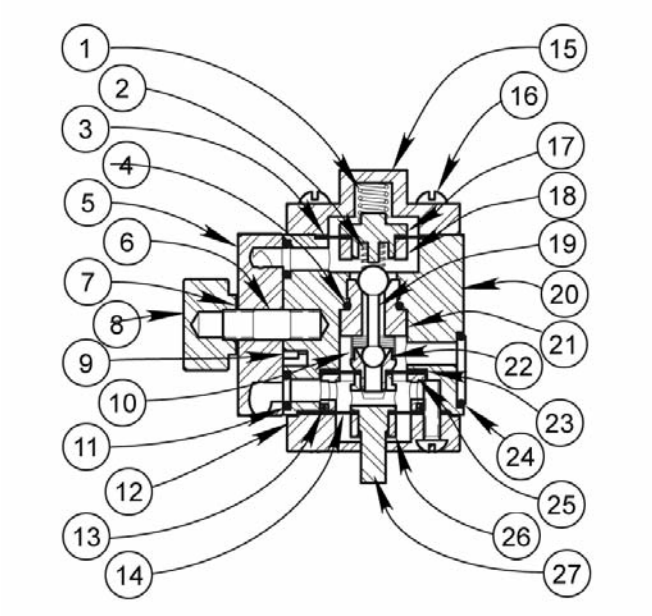

Key Description

1 Spring
2 Throttle Spring
3 Diaphragm, viton
4 O-Ring, viton
5 Switch Plate, aluminum
6 Knob Post, stainless steel
7 Lock Washer, plated steel
8 Selector Knob, aluminum
9 Selector Pin, stainless steel
10 Spring
11 O-Ring, viton
12 Bottom Cap, aluminum
13 O-Ring, viton
14 Diaphragm, viton
15 Upper Cap, aluminum
16 Screw, stainless steel
17 Plate, stainless steel
18 Sleeve, stainless steel
19 Pilot Plug, stainless steel
20 Pilot Block, aluminum
21 Upper Pilot Seat, stainless steel
22 Lower Pilot Seat, stainless steel
23 Diaphragm, viton
24 O-Ring, viton
25 Spacer, stainless steel
26 Sleeve, stainless steel
27 Actuator, stainless steel

GEN II BACKmount Pilot, Code YBU

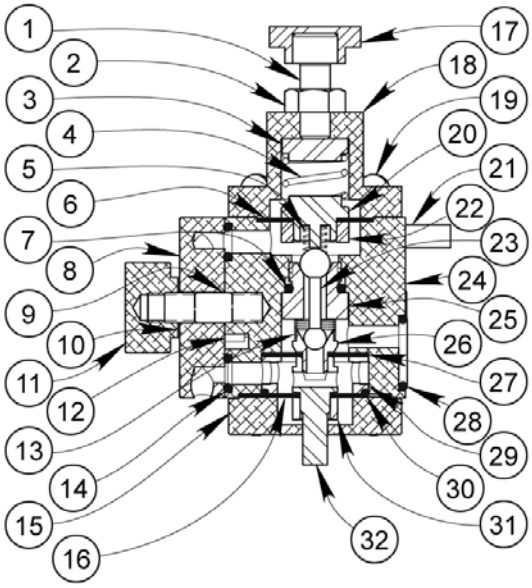

Key Description

1 Screw, plated steel
2 Nut, plated steel
3 Spring Plate, stainless steel
4 Spring
5 Throttle Spring
6 Diaphragm, viton
7 O-Ring, viton
8 Switch Plate, aluminum
9 Knob Post, stainless steel
10 Lock Washer, plated steel
11 Selector Knob, aluminum
12 Selector Pin, stainless steel
13 Spring
14 O-Ring, viton
15 Bottom Cap, aluminum
16 Diaphragm, viton
17 Thumb Screw, acetal
18 Upper Cap, aluminum
19 Screw, stainless steel
20 Plate, stainless steel
21 Screw, plated steel
22 Sleeve, stainless steel
23 Pilot Plug, stainless steel
24 Pilot Block, aluminum
25 Upper Pilot Seat, stainless steel
26 Lower Pilot Seat, stainless steel
27 Diaphragm, viton
28 O-Ring, viton
29 Spacer, stainless steel
30 O-Ring, viton
31 Sleeve, stainless steel
32 Actuator, stainless steel